HSF	禁止使用1级环境管理物质

Note:

Materials:
- .Plunger: Brass 10u" Au over 50u" Ni
- .Barrel: Brass 10u" Au over 50u" Ni
- .Spring: SUS

Mechanical:
- .Contact force: 100g±20% at 3.6mm working height
- .Life test: 10,000 cycles

Electrical:
- .Rated current & voltage: DC 12V; 1A
- .Contact resistance: 30 milliohm Max.

To ensure the best usage, please operate it based on the working height.
Based on the engineering drawings, shall not exceed the maximum allowed compression.

Approve Sign

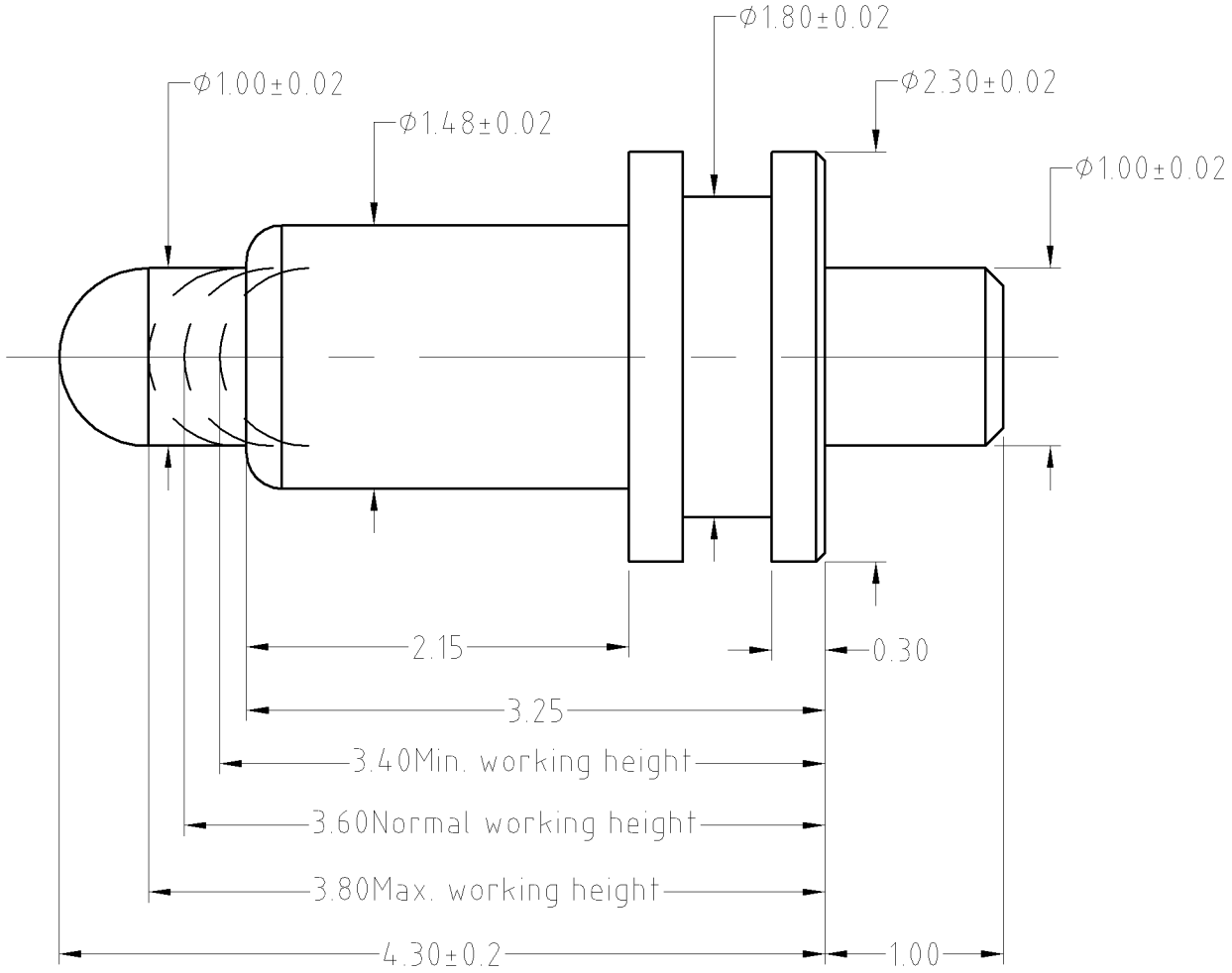

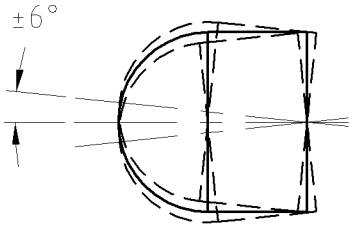

						SCALE	10:1	UNIT:mm	THIS DOCUMENT IS THE SOLE PROPERTY OF CFE CORPORATION CO.,LTD., AND SHOULD NOT BE USED IN WHOLE OR IN PART WITHOUT PRIOR WRITTEN PERMISSION.		CFE 东莞市川富电子有限公司 CFE CORPORATION CO.,LTD.	
						ANGEL	±1°	A4				
						0.000	±0.02		SHEET: 1 of 1			
						0.00	±0.05	DRAW			PART NO.	BP10211
	D0	2012.03.06	NEW			0.0	±0.10	CHECK			FILE NAME	BP10211
ECN(DCN) NO.	REV	DATE	DESCRIPTION	CHANGE	APPRO	GENERAL TOLERANCE UNLESS OTHERWISE NOTED		APPRO			TITLE.	Pogo pin connector