Note:

Materials:

.Plunger: Brass 20u" Au over Ni

.Barrel: Brass 20u" Au over Ni

.Spring: SUS Au

Mechanical:

.Contact force: 70g±20g at 0.7mm working stroke

.Max. stroke: 1.4mm

.Life test: 100,000 cycles

Electrical:

.Rated current & voltage: DC 12V; 3A Max.

.Contact resistance: 50 milliohm Max.

To ensure the best usage, please operate it based on the working height.
Based on the engineering drawings, shall not exceed the maximum allowed compression.

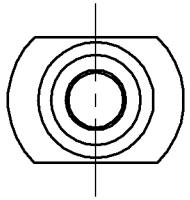

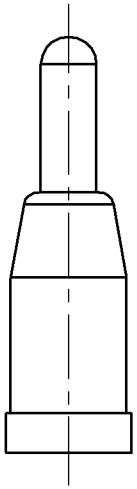

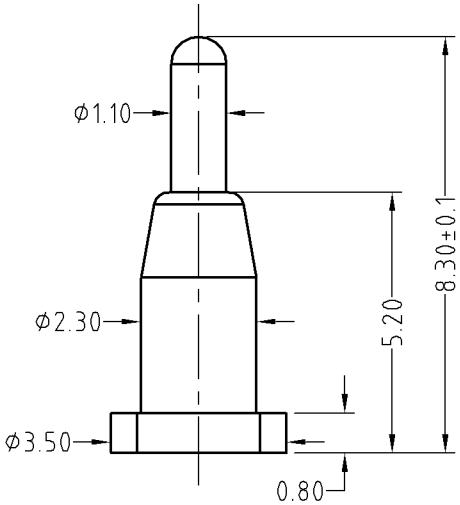

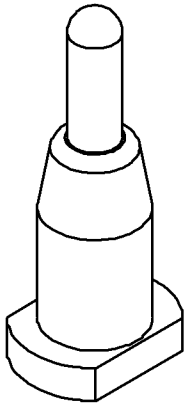

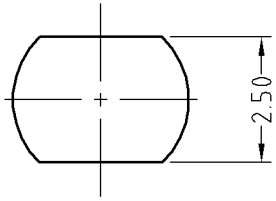

Approve Sign

———	D0	2013.05.30	NEW
ECN(DCN) NO.	REV	DATE	DESCRIPTION

SCALE	10:1	UNIT:mm	THIS DOCUMENT IS THE SOLE PROPERTY OF CFE CORPORATION CO.,LTD., AND SHOULD NOT BE USED IN WHOLE OR IN PART WITHOUT PRIOR WRITTEN PERMISSION.		CFE 东莞市川富电子有限公司 CFE CORPORATION CO.,LTD.	
ANGEL	±1°	A4				
0~6	±0.05		SHEET: 1 of 1			
6~30	±0.10	DRAW			PART NO.	BF15311
30~150	±0.15	CHECK			FILE NAME	BF153XX
GENERAL TOLERANCE UNLESS OTHERWISE NOTED		APPRO			TITLE.	Pogo pin connector