HSF	禁止使用1级环境管理物质

Note:

Materials:

.Plunger: Brass 60u" Au over Ni

.Barrel: Brass 60u" Au over Ni

.Spring: SUS Au 3u"

Mechanical:

.Contact force: 100g±25g at 0.9mm working stroke

.Life test: 20,000 cycles

Electrical:

.Rated current & voltage: DC 12V; 1A

.Contact resistance: 50 milliohm Max.

To ensure the best usage, please operate it based on the working height.
Based on the engineering drawings, shall not exceed the maximum allowed compression.

Approve Sign

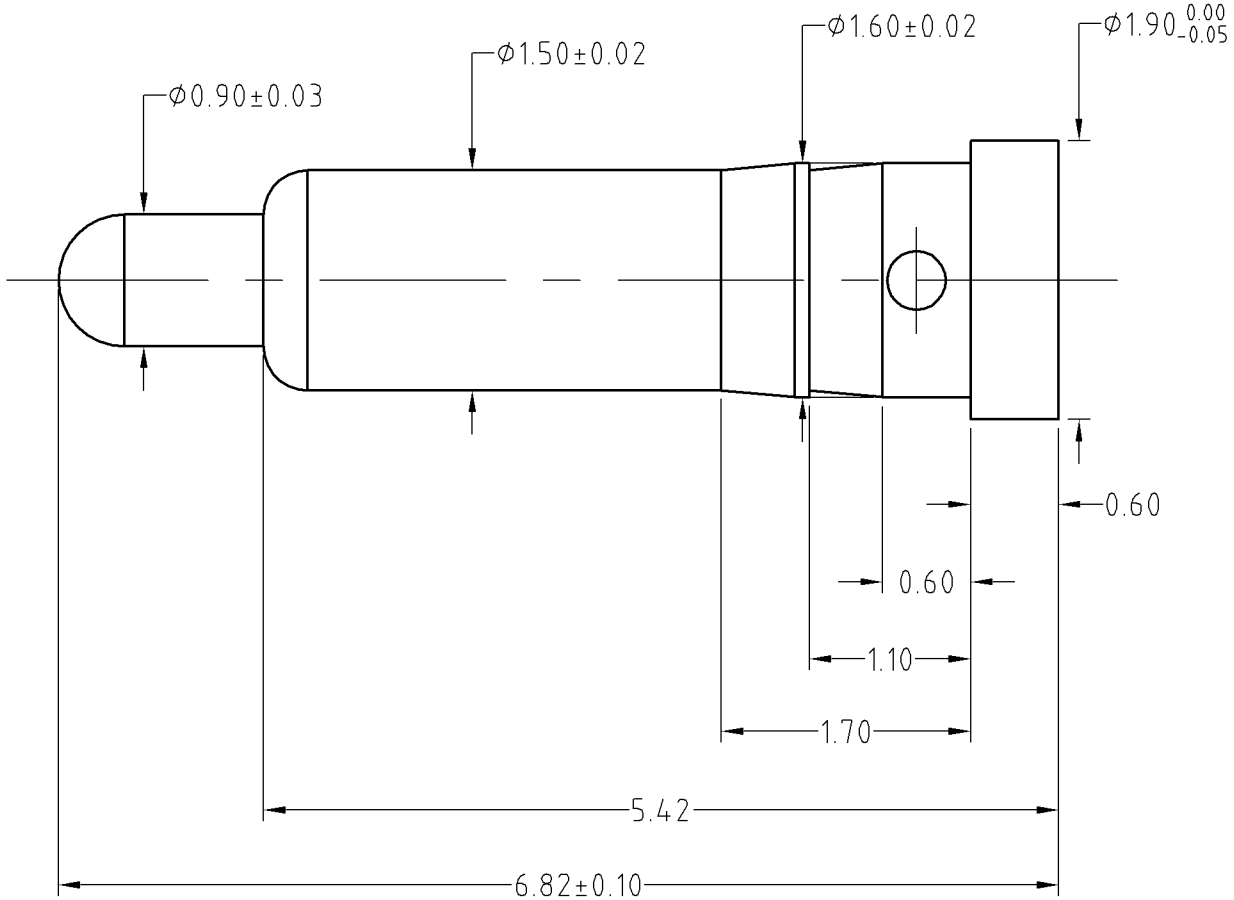

						SCALE	10:1	UNIT:mm	THIS DOCUMENT IS THE SOLE PROPERTY OF CFE CORPORATION CO.,LTD., AND SHOULD NOT BE USED IN WHOLE OR IN PART WITHOUT PRIOR WRITTEN PERMISSION.		CFE 东莞市川富电子有限公司 CFE CORPORATION CO.,LTD.	
						ANGEL	±1°	A4				
						0~6	±0.05		SHEET: 1 of 1			
						6~30	±0.10	DRAW			PART NO.	BF04511
———	A0	2013.10.16	NEW			30~120	±0.15	CHECK			FILE NAME	BF04511
ECN(DCN) NO.	REV	DATE	DESCRIPTION	CHANGE	APPRO	GENERAL TOLERANCE UNLESS OTHERWISE NOTED		APPRO			TITLE.	Pogo pin connector